BT SERIES

中空動力夾頭（二爪高速中空型）

2–JAW THOUGH HOLE POWER CHUCK

- 楔形二爪大貫通孔徑，特別適合异形物的夾持。
- 摺動面均經硬化及精密研磨，并直接潤滑。
- 高剛性結構及高夾持精度。
- It's a WEDGE–HOOK type 2–jaw with the large through–hole.
- Matching surfaces of all parts hardened,ground and lubricated directly.
- Construction of high rigidity and high clamping accuracy.

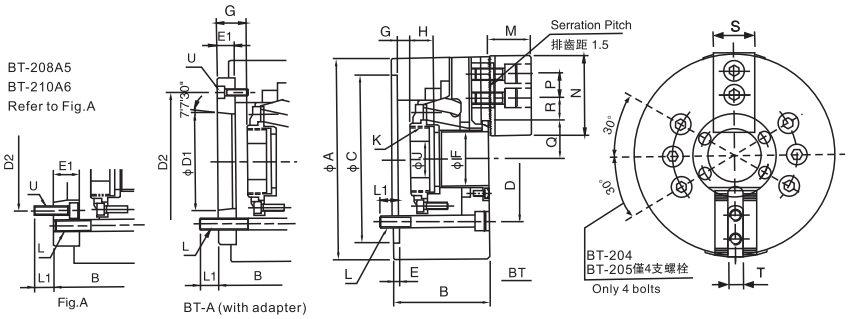

規格 Spec 型號 Model		楔心行程(mm) Plunger stroke	爪行程(直徑) Jaw stroke (Dia.) (mm)	夾持直徑 chucking Dia.(mm) 最大Max	最小Min	容許油壓缸推力 Max.D.B.Pull (kgf)	最大夾持力 Max clamping force (kgf)	最高回轉速 max r.p.m	慣性矩 kg*m2	重量 (kg) Weight		適合油壓缸 Matched cylinders
BT-204		10	5.4	110	7	940	1930	8000	0.01	3.8		H-0928
BT-205	A4			135	12	1190	2440	7000	0.02	6.5	7.3	H-1036
BT-206	A5	12	5.5	169	15	1470	3870	6000	0.06	11.5	13.3	H-1246
BT-208	A5	16	7.4	210	13	2360	5840	5000	0.17	21.3	24.2	H-1552
	A6										22.4	
BT-210	A6	19	8.8	254	31	2900	7540	4200	0.31	33.5	40.5	H-1875
	A8										39	
BT-212	A8	23	10.6	304	34	3740	9780	3300	0.70	59.7	62.7	H-2091
BT-215	A11			381	50	4790	12200	2500	2.23	115	122	H-2511
BT-218	A11	23	10.6	450	50	4823	12236	2000	3.31	122	133	H-2511

寸法Size 型號Model		A	B		C(H6)	D	D1	D2	E	E1	F	Gmax		Gmin		H	J
BT-204		110	59		85	70.6	–	–	4	–	26	3.5		–6.5		17.5	12
BT-205	A4	135	60	71	110	82.6	63.51	96		15	33	1	16	–9	6	20	
BT-206	A5	169	81	91	140	104.8	82.56	116	5		45	11	26	–1	14	19	20
BT-208	A5	210	91	109	170	133.4		104.8		23	52	14.5	37.5	–1.5	21.5	20.5	30
	A6			103			106.38	150		17			31.5		15.5		
BT-210	A6	254	100	120	220	171.5		133.4		25	75	8.5	33.5	–10.5	14.5	25	45
	A8			113			139.72	190		18			26.5		7.5		
BT-212	A8	304	110	122					6		91	8	26	–15	3	28	50
BT-215	A11	381	133	149	300	235	196.87	260		22	117.5	11	33	–12	10	39	60
BT-218	A11	450	133	149	300	235	196.869	260	6	22	117.5	7	29	-16	6	43	-

寸法 Size 型號 Model		K max	L	L1		M	N	P	Q max	Q min	R max	R min	S	T	U
BT-204		M32×1.5	3–M10	16		24	52	14	23	20.3	11.3	6.8	23	10	—
BT-205	A4	M40×1.5		15	15	31	62		26.5	23.8	19.8	7.8	25		3–M6
BT-206	A5	M55×2	6–M10	16	16	37	73	20	32	29.3	22.8	9.3	31	12	
BT-208	A5	M60×2	6–M12	20	18	38	95	25	38.7	35	29.8	14.8	35	14	6–M10
	A6														3–M6
BT-210	A6	M85×2	6–M16	22		43	110	30	51	46.6	33.8	14.3	40	16	6–M12
	A8				24										3–M8
BT-212	A8	M100×2		23	25	51	130		61.3	56	45.8	15.8	50	21	
BT-215	A11	M130×2	6–M20	30	28	66	165	43	82	76.7	46.8	13.8	62	25	4–M10
BT-218	A11	M130x2	6-M20*135	30	28	66	165	43	82	76.7	79.75	15.25	62	22	3-M10

* 保留技術更改的權利，恕不另行通知 Subject to technology changes without prior information
* 非標需求可訂做 Non–standard requirements can be made